Controlling Fugitive Emissions From Ball Valves

Michael Adkins and Pete Ehlers

More and more attention is being focused on fugitive emissions, which are defined as equipment leaks as opposed to point-source emissions from reactor vents or boiler exhaust stacks. United States regulations are honing in on fugitive emissions in regions, such as the Gulf Coast of the United States. The European Union's Integrated Pollution Prevention and Control Bureau (IPPC) issued a comprehensive directive to curtail fugitive emissions.

Effective for new construction since 1999, the directive applies to maintenance, repair, and upgrades at existing production facilities effective October 2007. It is estimated that this legislation will affect 50,000 installations in Europe. According to *European Process Engineer,* "The new legislation is wide-ranging and introduces a concept of Best Available Technique (BAT), urging plants to find the best available solution for reducing fugitive emissions … from areas such as design, product selection, fitting and fitter training to maintenance, site monitoring, and so on. As such, it requires companies to change the way they operate: industry must begin to make decisions on the basis of what is the best available product and operating method, and move away from its current cost-oriented framework."[1]

Fugitive emissions are defined variously and may refer to a wide range of emissions not confined to a stack, duct, or vent, including emissions from bulk handling or processing of raw materials, windblown dust, and other industrial processes.

With respect to emissions, in general, and fugitive emissions, in particular, the trend is clearly toward higher standards and more scrutiny. Fugitive emissions will be on the vanguard as regulators attempt to impose the next set of emissions standards, especially as concerns highly reactive volatile organic compounds (HRVOC).

Not all leaks are considered fugitive emissions. Leaks may be either internal or external. In the case of a ball valve, an internal leak could refer to a leak across the seat, from the upstream to the downstream side. So long as the valve does not vent to atmosphere, an internal leak would not result in a fugitive emission. By contrast, an external leak refers to a leak from inside the valve into the environment, for example, by way of the stem seal or body seal. To the extent that leaks pose harm to the environment, they are fugitive emissions.

According to an article in *Sealing Technology,* fugitive emissions worldwide amount to more than one million metric tons per year.[2] In a recent study, undertaken by the European Sealing Association, fugitive emissions from leaking valves, pumps, and flanges in U.S. plants, account for losses estimated at 300,000 metric tons per year in the chemical and petrochemical fields alone.[3] The same study observes that one-third of all emissions are fugitive emissions, with one-half of these coming from valves.

External leaks from fittings, valves, and other fluid system components can add up over the course of a year to major financial losses. For example, for a plant with 50,000 fittings, the average annual economic loss due to leakage from fittings alone is estimated at more than $25,000.[4] Such examples make the case for a total cost of ownership approach to system design, product selection, and maintenance.

In this article, we will focus on discrete component leaks, in particular, external leaks from ball valves, a widely used type of valve that enables high flow and effective shutoffs in many industries, including the chemical, petrochemical, oil and gas exploration, power, and alternative fuels industries.

To control fugitive emissions from ball valves, the critical point is to select the right ball valve for the application. Begin with accurate information about the application: pressure and temperature ranges, cleanliness of the medium, frequency of cycling, frequency of maintenance desired, allowable leak rate, flow requirements, and potential for contamination. Then, choose the valve technology that most closely accommodates your operating parameters, giving due attention to design and performance features, as well as material compatibility. While this article cannot address all ball valve types, we will focus on two design features that are especially important in controlling fugitive emissions and overall cost of ownership: body seal design and stem seal design.

Body Seal Design

Two common types of body seals are (1) screw type and (2) flange type. While the screw type is a stronger seal, enabling higher system pressure, the flange type allows fast and easy maintenance with the valve in line, an important benefit.

The screw type consists of one or two threaded “end screws” that screw onto the body of the valve after the ball and seat packing have been loaded inside. The sealing area of a screw-type fitting is relatively small and therefore it can be an especially efficient seal, enabling effective sealing at pressures as high 10,000 or 20,000 psig (689 or 1378 bar). In addition, the nature of the design enables the manufacturer to offer an especially wide range of end connection choices.

Ball valve assembled.

Figure 1 shows valves employing the flange type body seal consist of three discrete parts that are joined together with flanges, seals and long bolts. Such valves come apart for easy repair in situ.

In valves employing the flange-type body seal, the valve body consists of three discrete sections that are joined together with flanges, seals, and bolts (Figure 1). Because the sealing area across these components is larger, this design usually results in a lower pressure rating. Since the flanges are sealed with gaskets, there are fewer geometric constraints on the sealing material, and therefore a wider choice of sealing materials is available.
The manufacturer's standard sealing material is not always the answer. System designers should take care to research sealing materials in conjunction with their system operating conditions, considering the full range of options, including metal gaskets, many different types of elastomer O-rings, and Grafoil packing, which may offer a more robust valve design. The bolts in the flange-type body seal should be of high grade and material, such as strain hardened 316 stainless steel, to ensure sufficient sealing load is maintained.

Beyond sealing materials, an advantage of the flange-type design is the ease of maintenance. Once the bolts are removed, the valve's body swings out for easy repair, eliminating the need to remove the entire valve from the system. Seat and body seals are easily accessible. As regulations targeting fugitive emissions get tougher, ease of maintenance and repair will become more important. A valve that is easy to maintain and repair is also one that is more likely to be maintained and repaired.

Leaks may occur not just at sealing points but also through body materials, such as castings. When specifying valves, system designers should inquire about the

integrity and inspection of body material, whether cast or machined. What specifications does the valve manufacturer hold the metal supplier to? What quality controls are in place? A Certified Materials Test Report provides many answers to the most critical questions concerning the quality of body material.

Stem Design

In a ball valve, there must be some means of ensuring that the system media, whether liquid or gas, does not leak from the stem and body interface. This is the role of the stem seal. With sufficient cycling frequency, all stem seals are subject to wear, and wear can lead to leakage. However, some seals are more effective than others in certain applications. Based on the application, a deliberate choice between design types should be made.

One-Piece Stem Packing

The most basic and primitive technology is a one-piece gasket that encircles the stem. As the packing bolt is tightened down on the stem, the gasket, usually made of polytetrafluoroethylene (PTFE), is crushed, filling the space between the stem and the body housing.

Unfortunately, PTFE and other similar packing materials are subject to cold flow, which is the tendency for certain materials to change shape over time; cold flow can be exacerbated by pressure and temperature. In some cases, the material may extrude into areas where it was not intended to go, undermining its effectiveness and leading to leakage of system media.

To compensate for cold flow, the packing bolt may need to be tightened more frequently to increase the compression load on the stem seal, especially as application pressures and temperatures change and as the valve is repeatedly cycled. The additional tightening increases the force against the stem, requiring more force for actuation. With all the occasional retightening, it is possible that the packing bolt will bottom on the valve body, at which point the packing will need to be replaced.

This basic packing technology requires frequent inspection and adjustment; otherwise, leakage may occur. Unfortunately, to the untrained operator, it is not always clear when adjustment is required.

To reduce the risk of fugitive emissions, the one-piece packing design should be reserved for applications where fluctuations in temperature and pressure will be minimal, where cycling will be limited, and where inspection and monitoring will be frequent and regular.

Two-Piece Chevron Stem Packing

A two-piece chevron stem packing design is an improvement on the one-piece design and therefore allows for wider temperature and pressure ranges, as well as regular and easy actuation without excessive wear.

A chevron packing consists of two matched gaskets, one fitting inside the other. The cross-section of the gaskets is triangular in shape. Fitted together, the two gaskets form a rectangular cross section (Figure 2). As force is applied from the stem's packing nut, the two gaskets are pushed against each other along the diagonal point where they meet, which sends the force horizontally and evenly against the stem and body housing. With minimal pressure from the packing nut, a substantial seal is created between the stem and the body housing.

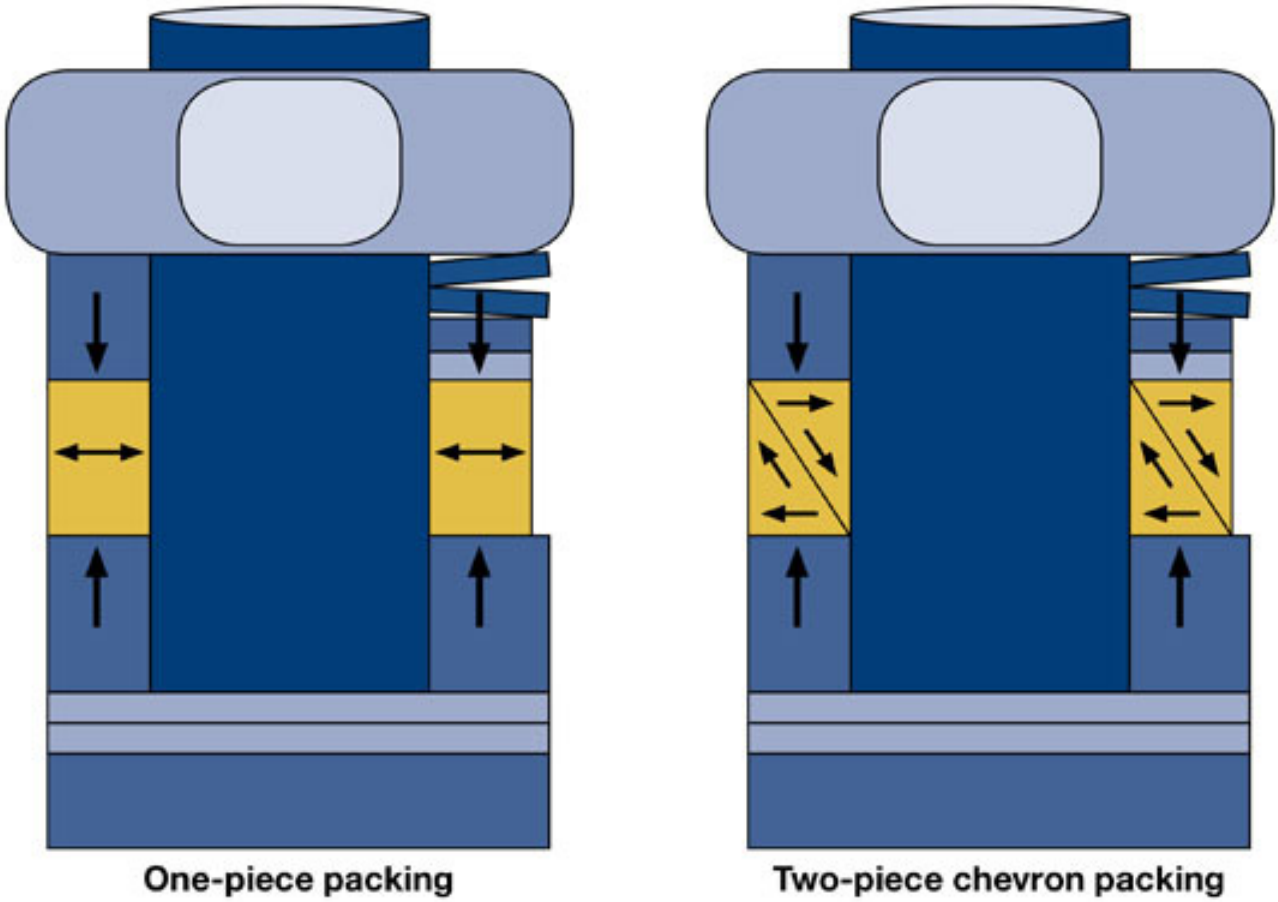

Figure 2 shows cross sections of two different types of packing. On the left is the standard one-piece packing. On the right are the two ferrules that make up a chevron stem packing. In the chevron packing, minimal pressure from the packing nut pushes down on the two triangular shapes, resulting in outward, even pressure between the stem and the housing.

For the chevron seal to work correctly, the two PTFE gaskets — the packing — must be held in place to reduce "cold flow" during thermal cycling. The packing in the chevron design, therefore, must be adequately contained and supported by packing support rings and glands, which evenly distribute pressure to the packing.

To reduce the interval of inspection and adjustment, the chevron design also may include BellevilleTMwashers, which are springs that create a "live load" on the packing. Live loading enables even pressure on the packing, as temperatures and pressures fluctuate. These springs provide a constant bias force against the seal and the body to ensure that the appropriate amount of sealing force is provided. At

high temperature, the springs compress and allow space for the packing to expand. At low temperature, they expand and maintain the correct amount of pressure on the packing. This live loading system enables the chevron design to maintain a constant seal using this steady biasing spring force. The result is easy actuation and minimal wear to the packing. Without the springs, the packing would have to expand and contract in a relatively fixed space. As the packing expanded at high temperature, load on the stem would increase and cold-flow could occur. The result would be increased wear on the packing and difficult actuation.

Some valve designs may allow system pressure to push up on the stem, and a live-loaded mechanism accounts for this movement – as well as expansion and contraction of the packing – enabling consistent pressure on the packing.

One-piece packed valves may contain springs and purport to be live loaded but they are not as effective. The springs will enable the PTFE packing to contract and expand to some degree, but without the chevron design they cannot ensure consistent pressure on the stem. By definition, a single-piece packed valve requires heavy biasing spring force on the packing so it can bow outward and create a tight seal. With repeated actuation, wear to the packing can be considerable. The wear will require frequent replacement of the packing and may lead to leakage.

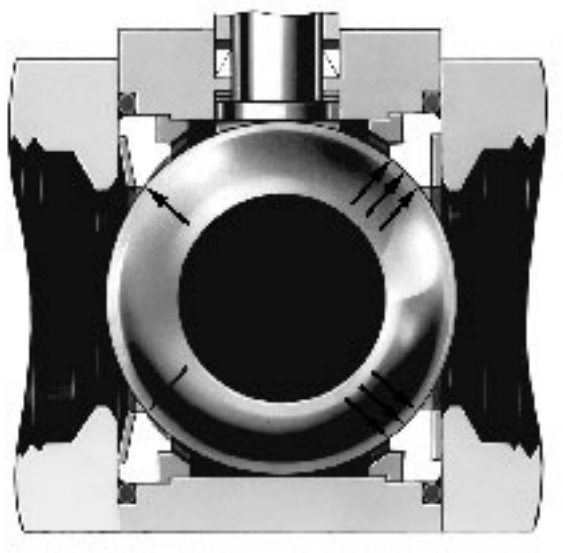

Figure 3 shows a cross section of a floating ball valve in the shut position, with downstream pressure pushing the ball to seal on the right hand side. Arrows point to the seat seals.

O-ring Seal

Another effective stem seal technology is the O-ring design. When properly designed, this technology provides flexibility for applications requiring high

pressure, low pressure, or a broad pressure range, such as a cylinder, where, for example, pressure may drop from 2,300 psig (158.5 bar) when full to 100 psig (6.9 bar) as it nears empty.

The O-ring is usually made from a highly elastic material, such as fluorocarbon FKM. Like the two-piece chevron design, the O-ring design does not require excessive pressure from the packing nut. Rather, the O-ring is energized by pressure in the media stream. As pressure in the stream increases, the O-ring further deforms and increases pressure on the stem. Conversely, as pressure in the gas stream decreases, the O-ring relaxes, filling the space between the stem and the body. Because it is elastic, the O-ring's cross section deforms and reforms to make the necessary seal.

A proper stem design with an O-ring configuration requires a back-up ring or some other mechanism, usually made of PTFE, which will contain the O-ring under high pressure. This back-up ring is designed to reduce the extrusion gap of the O-ring gland and therefore keep the O-ring contained. If the O-ring is permitted to extrude beyond its specific bounds, the O-ring may be sheared during actuation. Extrusion may lead to leaks and will make actuation difficult.

The O-ring design is highly effective at high pressure. In terms of temperature, pressure, and chemical attack, the design is limited by the specifications of the elastomer. The user must take the initiative to understand the system media and the potential for chemical interaction with the elastomer.

Stem Misalignment

Beyond issues relating to stem seal design, there are some additional causes of leaks from the stem. These have to do with alignment of the stem. If for any reason the stem becomes tilted or forced to one side, there may be uneven wear to the stem seal, resulting in leakage. There are two basic causes of misalignment.

In the first case, misalignment may result from improper installation of the actuator. If the center line of the actuator and the center line of the stem are not properly aligned, the stem will become tilted or askew, resulting in uneven wear of the stem seal.

In the second case, damage to the seat seal inside the valve may cause the stem to tilt. To understand this issue, we must first review basic ball valve anatomy. Ball valves can employ either a floating or trunnion ball design.

In a floating ball design, the ball is not fixed inside the housing but, rather, floats between two seats. In the shutoff position (Figure 3), the ball seals against the seat on the low-pressure side, pushed downstream by a positive pressure differential. By contrast, the trunnion design employs a ball, but the ball is not a discrete sphere. Rather, its geometry includes two cylinders—which are called the trunnions— affixed to the ball at the top and bottom (Figure 4). The unit fits into a space in the valve body and cannot move along the flow axis. As the ball rotates to the open and closed positions, it glides on the trunnions, which can be fitted with

bushings or bearings.

In the case of high differential pressure across the seat, a free floating ball can be pushed downstream – too far downstream. In the absence of an advanced seat design – such as a spring energized seat, with an O-ring and spring on each side – the ball may not return to the center position. As a result, the stem will tilt to one side, and, with time, uneven stem wear will occur.

The trunnion design prevents excessive movement of the ball downstream. The trunnions, which are fitted in place, keep the ball centered and the stem properly aligned. Even with a “hammer effect” – where a non-compressible medium, like water, produces a pressure spike – the trunnion design will keep the ball centered.

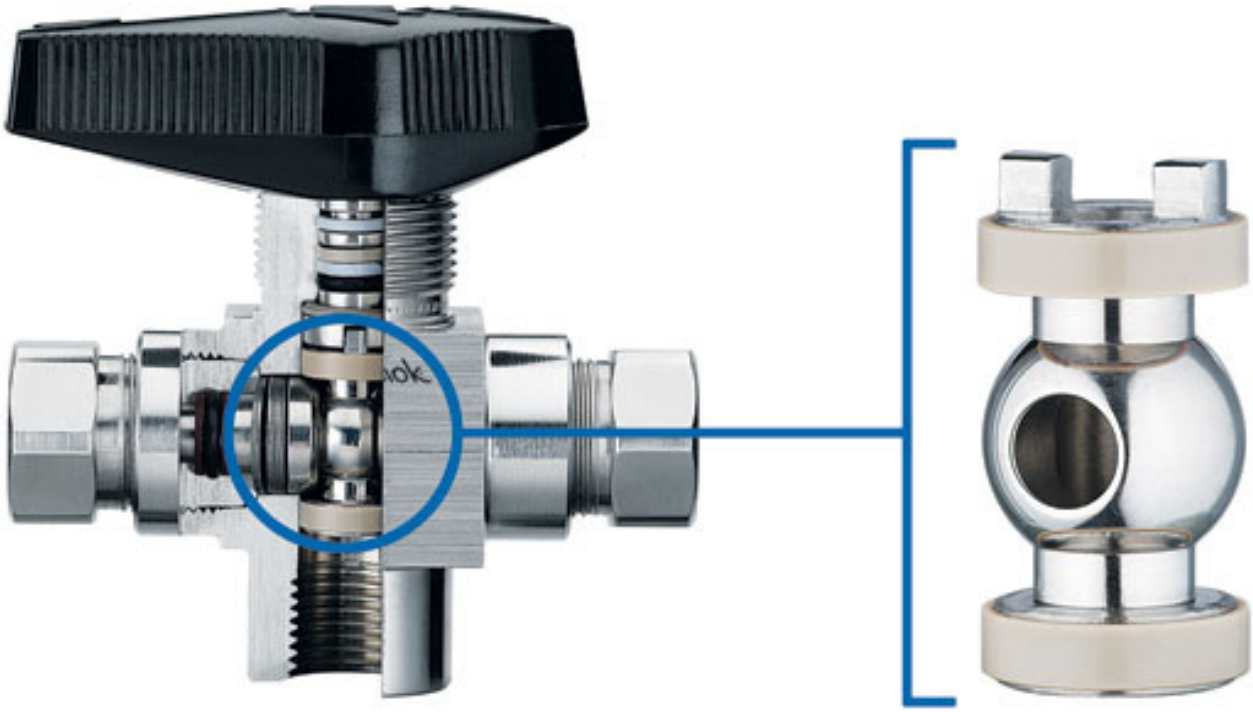

Trunnion Ball Valve Trunnion Ball

Figure 4 shows a trunnion ball valve.

Conclusion

The purpose of this article is not to advocate for one design over another – for a trunnion design over a floating ball design, for example. Most designs have their appropriate applications. This article intends to show that different designs have different strengths and relative merits, and these have a direct impact on fugitive emissions. When choosing a ball valve, a system designer should give due consideration to material compatibility, pressures, temperatures, desired frequency of inspection and adjustment, and frequency of actuation. Further, when cost

becomes a leading determinant in choosing a valve, the system designer should be aware of what compromises he or she may be making. The real cost of a valve is not the purchase price but the overall cost of ownership. With raw material feedstock prices increasing, as well as the frequency and severity of environmental non-compliance fines, direct and indirect costs associated with frequent maintenance, failure and replacement must be considered.

___

For more information, visit www.swagelok.com *[1].*

Michael Adkins is general industrial valve product manager and Peter Ehlers is alternative fuels market manager for Swagelok Company, Solon, Ohio, U.S.A.

___

References

[1] Childs, Peter. “Gasket and Seals Significantly Reduce Fugitive Emissions.” October 31, 2005.

[2] Onat, Adem. “A Review of Fugitive Emissions.” October 10, 2006.

[3] European Sealing Association; http://www.europeansealing.com/ [2]

[4] Sterling, Arthur. “Fugitive Emission from Tube Fittings: Prevalence and Magnitude (Revisited),” September 1, 1999.

Source URL (retrieved on *03/31/2015 - 3:39am*):
http://www.impomag.com/articles/2010/06/controlling-fugitive-emissions-ball-valves

Links:
[1] http://www.swagelok.com
[2] http://www.europeansealing.com/