# Super Lathe

Joyce Laird

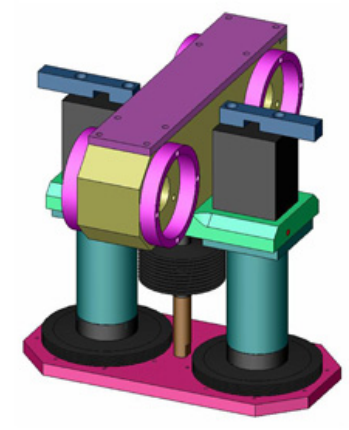

Dual ScrewRails and a linear actuator resulted in a series of semi-complex parts in the LA3200 XZ-Axes housing.

Microabrasive blasting has been around for decades and is in use in a wide range of industries from metalworking to medical. Comco, headquartered in Burbank, CA has been focused on this technology since 1968.

Microabrasive blasting provides a way to pinpoint cleaning, surface texturing, polishing, etching and material removal from hard to reach device surfaces. It projects a blast of clean, dry air mixed with abrasive media, delivered through a nozzle selected to suit the application. Due to the nature of the technology, most processing is still manual. While the PSI, media mixture and safety measures are automatic, an operator still controls the direction of the blast.

**Automating A Lathe System**

Comco’s core products are high precision microabrasive blasters. When an operator is not accurate or repeatable enough, customers ask for custom automation. In the fall of 2001, Engineering Manager Mickey Reilley was tasked with coming up with an automated stent blasting machine for a customer and saw a future for this product in other applications.

“Our first automated lathe, the LA1500, was designed from a generic standpoint with the goal to adapt it to other applications. It was a basic lathe, a spindle turned a part at a set RPM while the nozzles traveled back and forth over the part, applying the microabrasive blast stream,” Reilley says.

The blast head moved at set speed and bounced back and forth between proximity sensors for a set number of cycles. A PLC was used to tie everything together. In automating the blasting process, the biggest issue Reilley ran into was dealing with micron sized abrasive particles that will destroy bearings.

“We had to find a way to protect the automation components from this abrasive. I optimized the air flow through the machine and I positioned sensitive items as far away from the blast stream as feasible. All sensitive items were protected with an array of fixtures including bellows, seals, wipers and purge air. These efforts paid off. Abrasive contamination is rarely an issue, even with today’s advanced machines,” he says.

The design allowed the system to hold a variety of parts and provide multiple nozzle arrangements. The part tooling and nozzle head were customized for each application, but the basic machine remained the same.

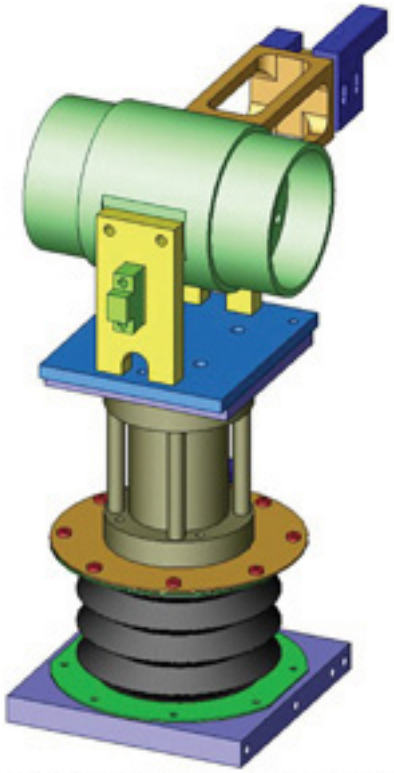

*A single ScrewRail and air cylinder kept the LA1500’s XZ-Axis housing relatively simple.*

**Evolution**

Customers readily accepted the LA1500 and with each subsequent order additional features were requested, many of which provided more separation between the technical setup and the production operator.

“Simultaneously, I was already noodling a CNC lathe that would give far more production capabilities. When we received a repeat order from the original lathe customer for a smarter machine, I decided to release the next version that was computer based and fully CNC — the LA3200. This machine gave both us and our

customer the ultimate in flexibility," Reilley says.

The LA3200 upgraded all motion axes to closed-loop stepper motors. User interface was upgraded to a touch screen LCD. The PLC was replaced by a computer, motion control card and a series of custom designed circuit boards, resulting in a three axis CNC machine.

Customer's technicians could program the machine with G-code and operators were only presented with a list of programs to run. Once a program was selected, the lathe would tell them which part tool and blast head to load. Using proximity sensors and a scanning routine, the lathe would disallow operation until the operator had properly loaded all required parts.

"Microblasters are largely mechanical in nature. Therefore, the software and electronics portions of the LA3200 project were challenges. I solved this by spending several weeks planning and specifically detailing how I expected the software to work. This included describing the various machine states (idle, running, error, etc.) and the expected performance, plus how the machine was expected to transition between states. I also did a complete user interface design mock-up in PowerPoint.

Then I hired two contract software engineers to handle the coding: one for the machine states plus user interface, and another to iron out the motion control and data communications," Reilley says.

The electrical design was similarly handled. A series of custom boards were needed to interface the various sensors, motors and blaster I/O with the computer. Reilley hired a contract electrical engineer who did the electrical circuit design while Reilley did the board layout. Everything was timed. Just as the first board prototypes were being brought on-line, the software engineers were ready to test the communications and controls. The mechanical was similarly timed. Everything came together at once.

**Current Generation**

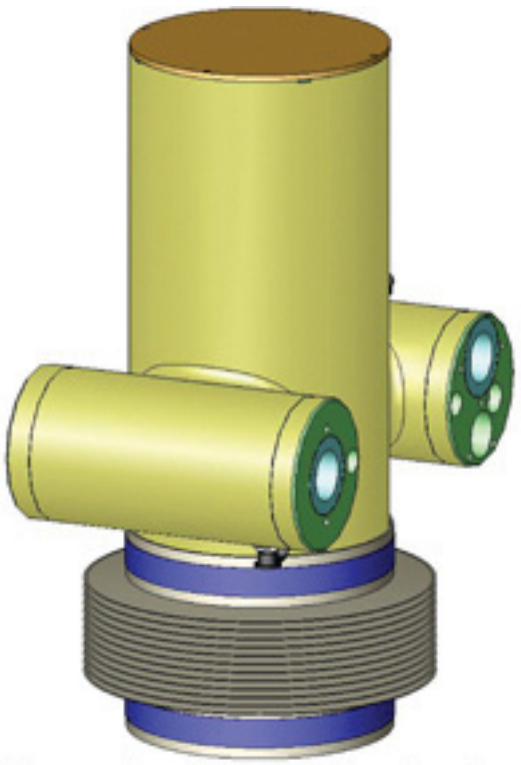

*The complex LA3250 XZ-Axes housing consolidates many design features, resulting in a very clean product.*

Three years after introducing the LA3200, Comco was approached by an automotive customer who needed an automated machine more akin to a mill than a lathe.

To handle this application, the LA3250 was created. It is a stiffer, faster and cleaner version of the LA3200. The spindle was designed to be modular, so for customers who need XYZ motion the spindle could be replaced with a tooling plate. A Y-axis was designed that would move the tooling plate (or spindle) front to back in the machine. The XZ-axes were redesigned to be far stiffer, and to eliminate a noisy linear actuator. New motors were selected with integrated stepper amplifiers to simplify wiring.

"The LA3250 retains the part holding and blast head fixturing flexibility found in the LA1500 and LA3200, but adds axis flexibility. With an optional y-axis, and easy configuration of the spindle, tooling plate, or custom part holder, it is flexible on many levels, and therefore capable of handling a much larger variety of parts. Each customer’s application is different, and the LA3250 gives us the required flexibility to handle them,” Reilley adds.

**Mechanical Redesign**

A major mechanical redesign was done for the XZ-axes. The Haydon Kerk Motion Solutions (Kerk) ScrewRails were replaced with recirculating ball bearings on two 1" circular stainless steel shafts and a single Kerk leadscrew. The Z-axis motor was replaced with an MDrive turning another Kerk leadscrew. “As an experiment, the housing was designed as a single complex piece,” Reilley says. “The previous design was a series of medium complexity parts that screwed together. This gamble

paid off. The XZ-axis is far easier to assemble, completely air-tight, and costs less than the sum of the old design's parts."

Reilley says that what helped most with the final design is the Galil card. "Motion control can be complex, but Galil has set up a customer support architecture that makes it easy. Their documentation is excellent, and when you have questions they always have an expert available by phone. They knew it inside-out, and were able to give us easy-to-act-on answers."

The second biggest benefit to the final design was the change to the IMS MDrive motors which cleaned up the inside of the machine immensely, making assembly and service vastly easier.

From Comco's perspective, the flexibility of the lathe gives them the benefit of being able to solve a wide range of blasting needs in one machine. Interchangeable blast heads and versatile part holding make it easy to apply to any application.

"We've had the LA3250 for about a year and a half now," Reilley says. "We're still waiting to be stumped by the application that will drive the next evolutionary step."

**Key Components**

**LA1500:**

- Electronically, the system followed some of Comco previous customs. The PLC was a Siemens 6ES7 model with an additional I/O module. The spindle was turned by a Bison DC gearmotor driven by a Minarik motor driver. The X-axis motor was custom made by Pittman, driven by a Comco-designed, constant speed amplifier.
- Mechanically, the design was all new. The X-axis was a ScrewRail by Haydon Kerk Motion Solutions (Kerk). This was selected because it was an integrated linear bearing and leadscrew, which made it compact and easy to protect against abrasive. The Z-axis was driven and supported by a Bimba FT air cylinder. This air cylinder has two shafts, so it wouldn't rotate, and its shape was conducive to bellows protection.

**LA3200:**

- To meet the system goals, Comco Engineering Manager Mickey Reilley needed to entirely replace the electronics. For computing power, he considered using an industrial computer, but to save cost and avoid being tied to one vendor, he decided to use a standard, micro-ATX computer.
- For the motion controller card, Reilley considered Delta Tau and Galil. Galil's DMC-1842 PCI motion controller was selected for one key reason: simplicity. "We understood that the Delta Tau controller was more powerful, but Galil provided such amazing documentation and technical support, that the decision was clear," he says.

- Mechanically, the overhead drive was changed to have two parallel Kerk ScrewRails for increased rigidity. These were synchronously driven using one motor and a timing belt drive. The Z-axis motor was redesigned to use an Electrocraft (formally Eastern Air Devices) stepper motor linear actuator. This was selected for its compact size and high force value.

**LA3250:**

- The single most beneficial change was changing from separate stepper motors and amplifiers to integrated units. “We are now using IMS’s MDrive integrated stepper motor and amplifiers,” Reilley explains. “This vastly simplified the wiring inside the lathe by removing an amplifier and breakout board for each axis. This change has helped reduce our final wiring time from three days to one. Plus, the cost of the integrated motor is less than the combined cost of the previous components.

**Source URL (retrieved on *07/30/2014 - 6:46am*):**
http://www.impomag.com/articles/2009/10/super-lathe